ENKO GROUP
SMART SYSTEMS FOR DESIGN INTERIORS

VIBO FLYMOON INSTALLATION INSTRUCTIONS

VIBO Design your space

Fly Moon shelves

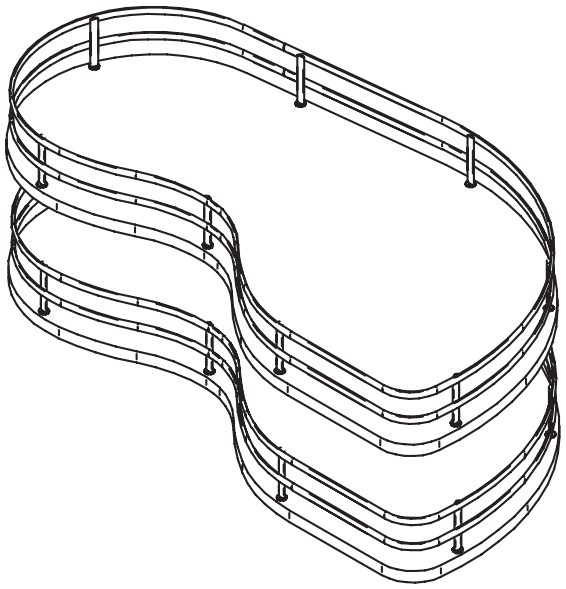

Galaxy Chrome

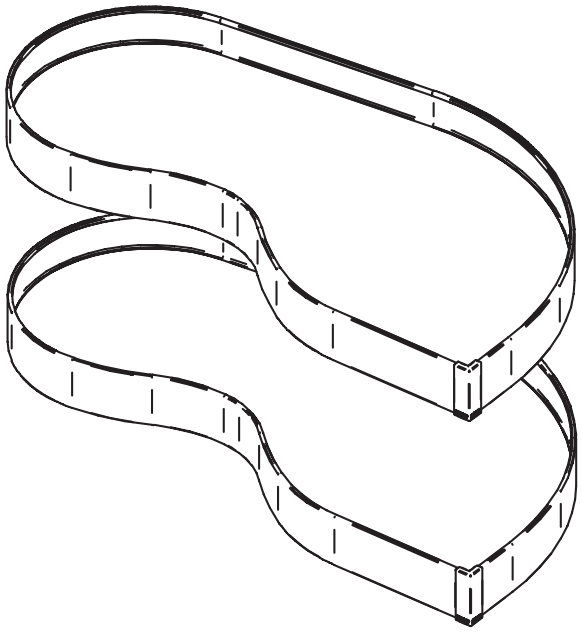

Urban GM

20 Kg	5 min	x 1	+
Per shelf			

A

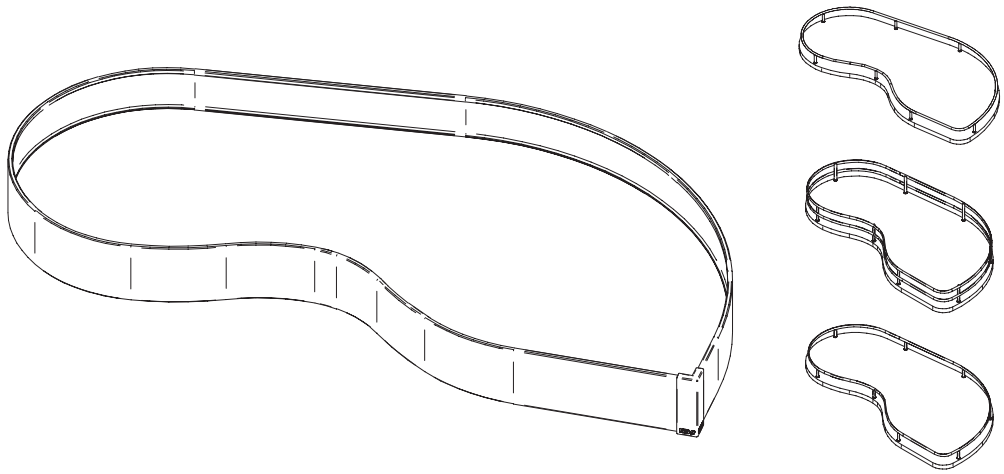

x 2

B

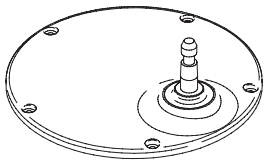

x 4

C

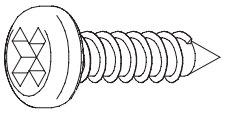

x 20 Ø4X16

WARNING! Read the instructions carefully before assembly and follow each step indicated.

1 x2

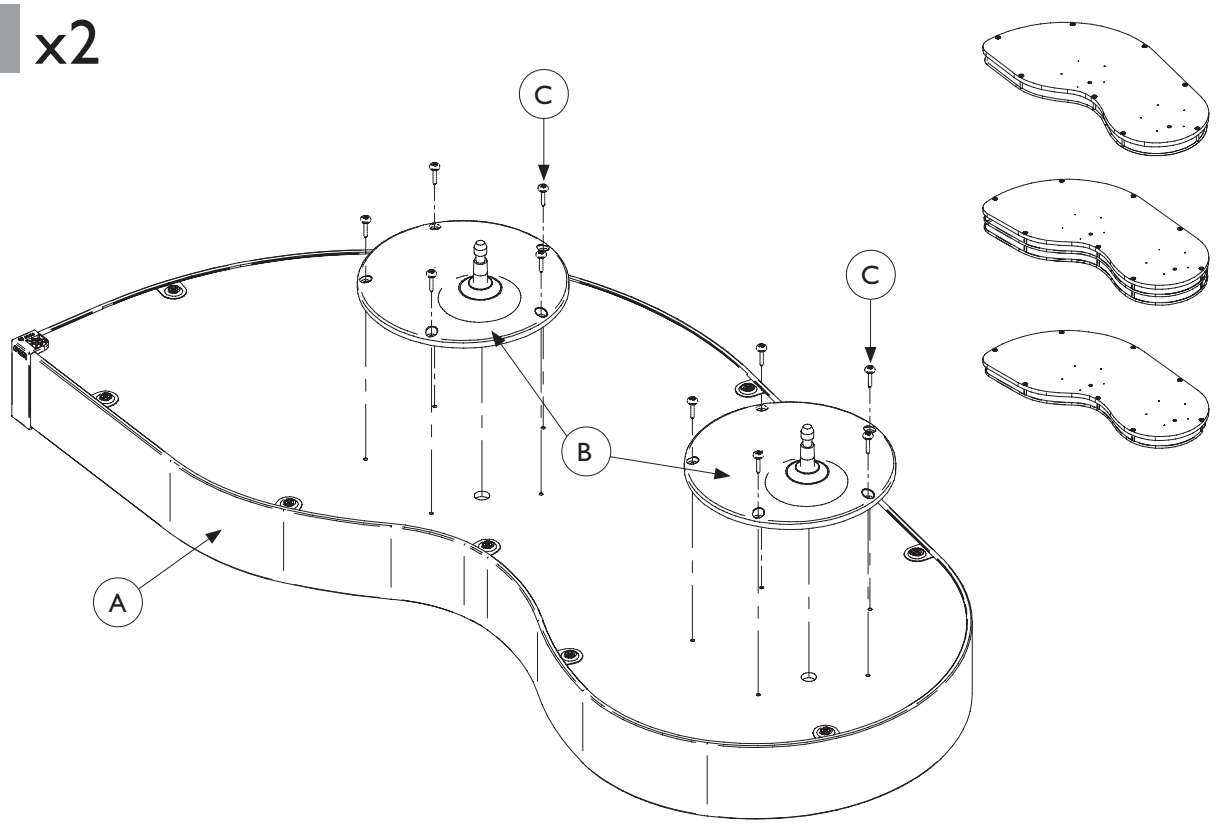

A

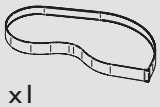

x1

B

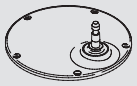

x2

C

x10

2

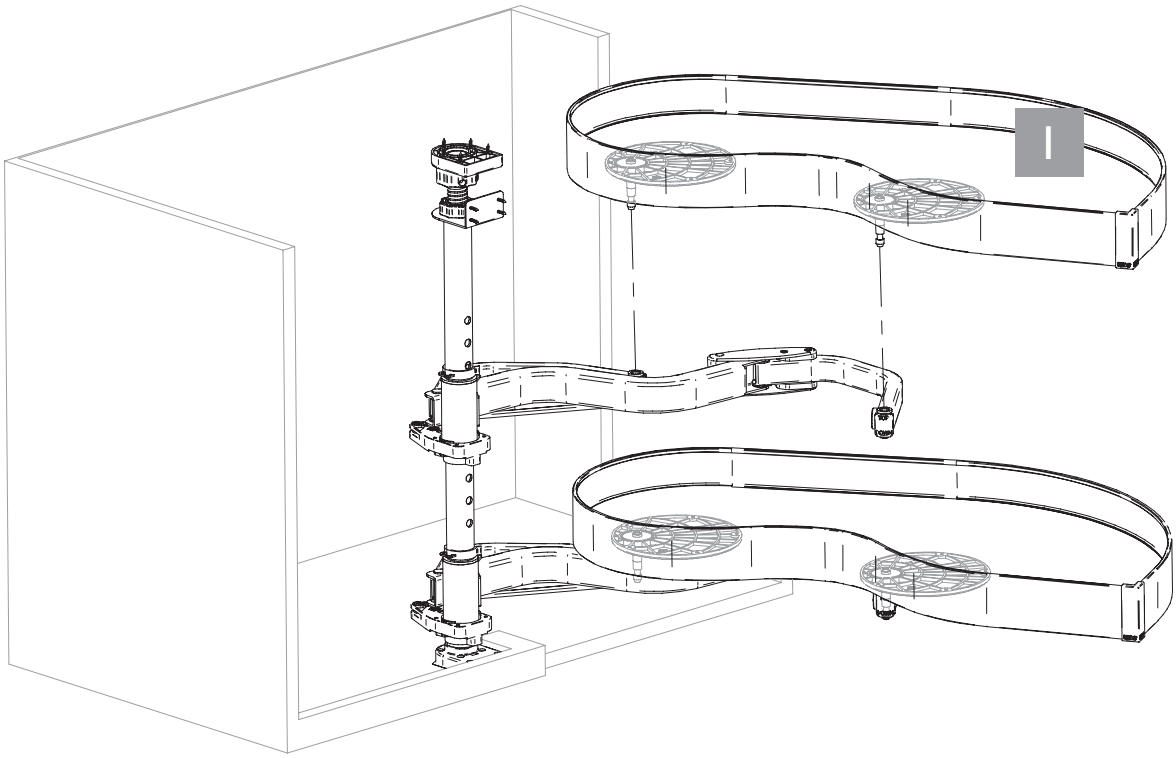

Fly Moon base
(Non-soft close)

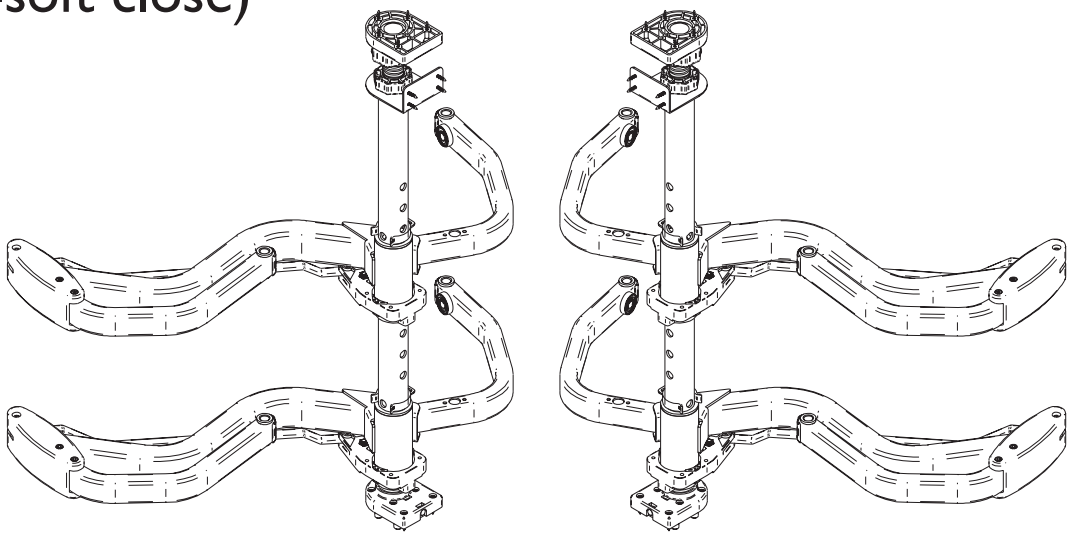

Left hand version

Right hand version

A
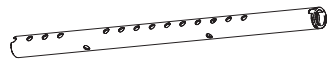
x1

B
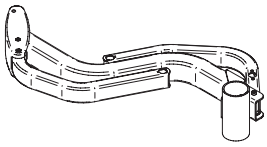
x2

C
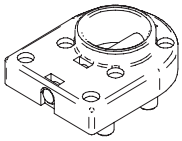
x1

D
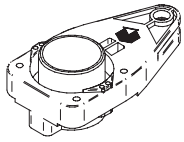
x2

E
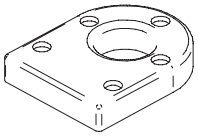
x1

F
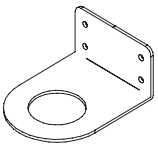
x1

G
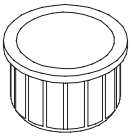
x2

H
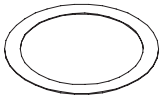
x2

I
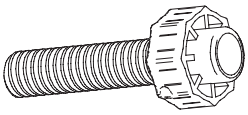
x1

L
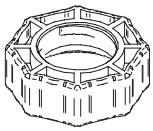
x1

M
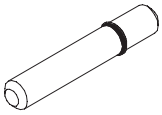
x2

N
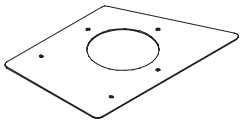
x1

O
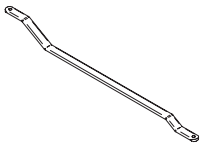
x2

P
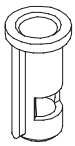
x4

Q

x4

R
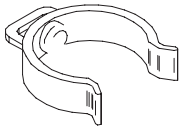
x2

S
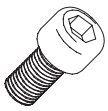
x2 M6X12

T

x4 Ø4X16

U

x11 Ø4X25

V

x2 M6X40

Z
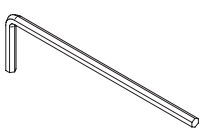
x1

1 Left version

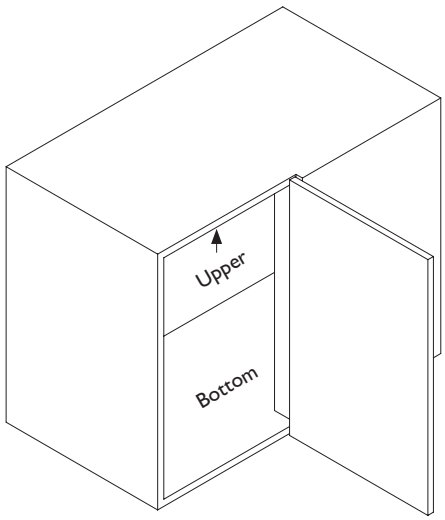

DOOR	A	B
40	436	427.5
45	486	477.5
60	636	627.5

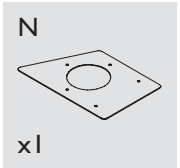

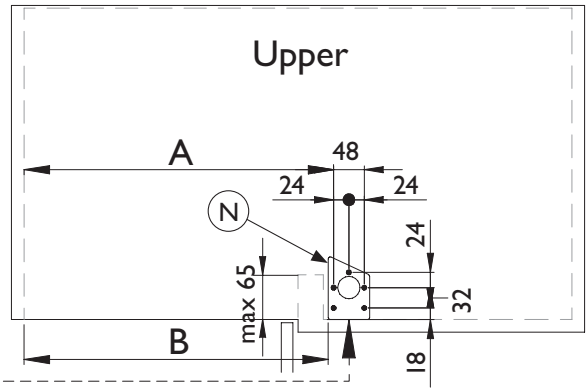

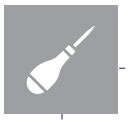

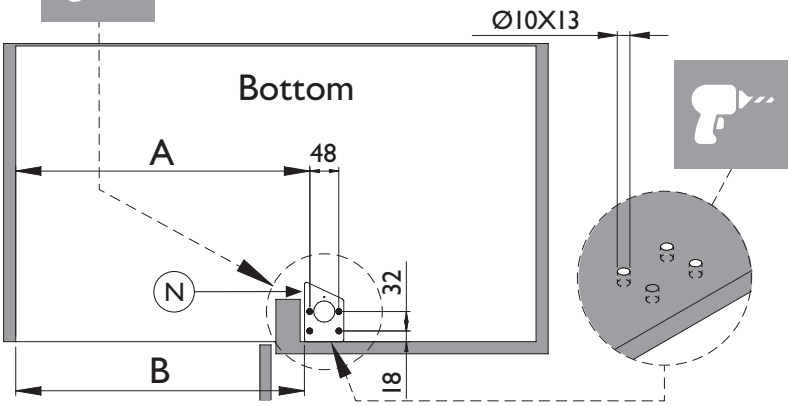

2

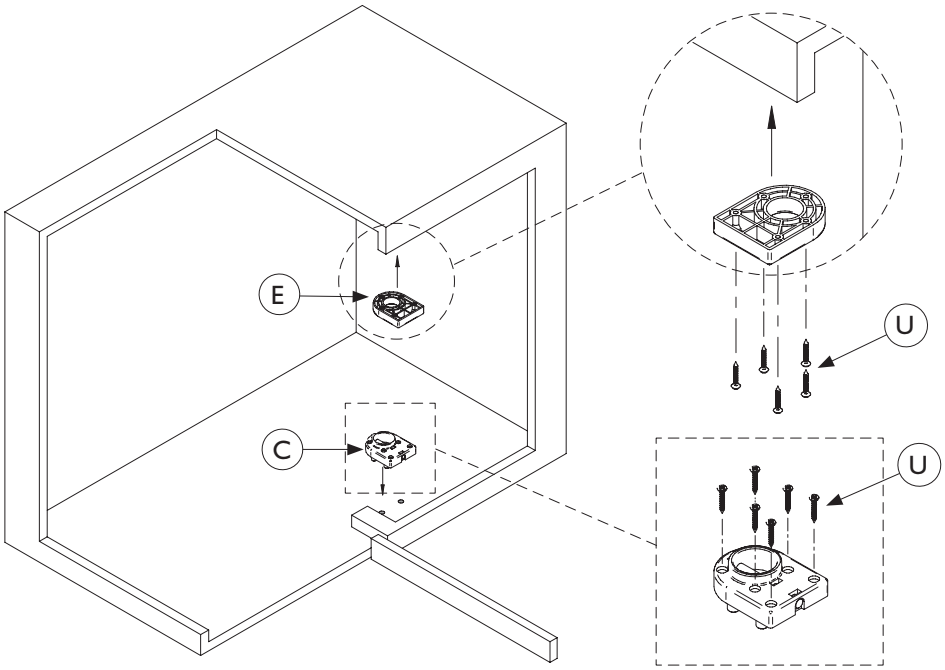

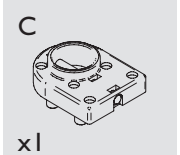

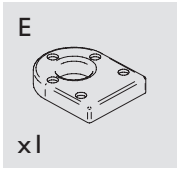

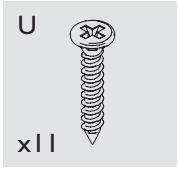

Left hand version

3 x2

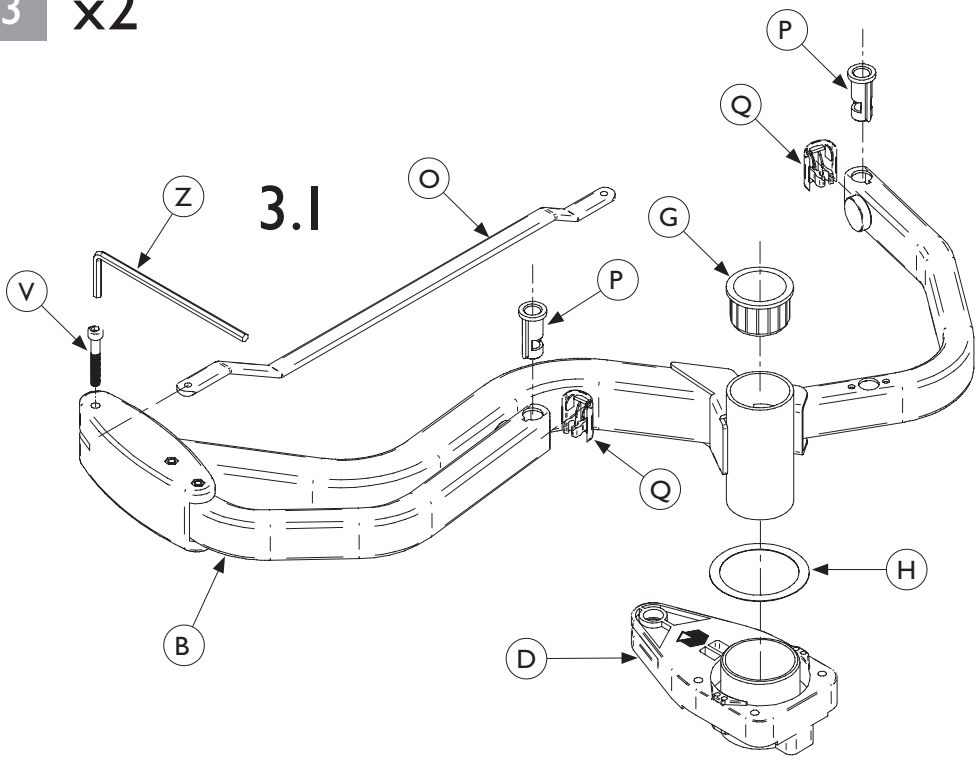

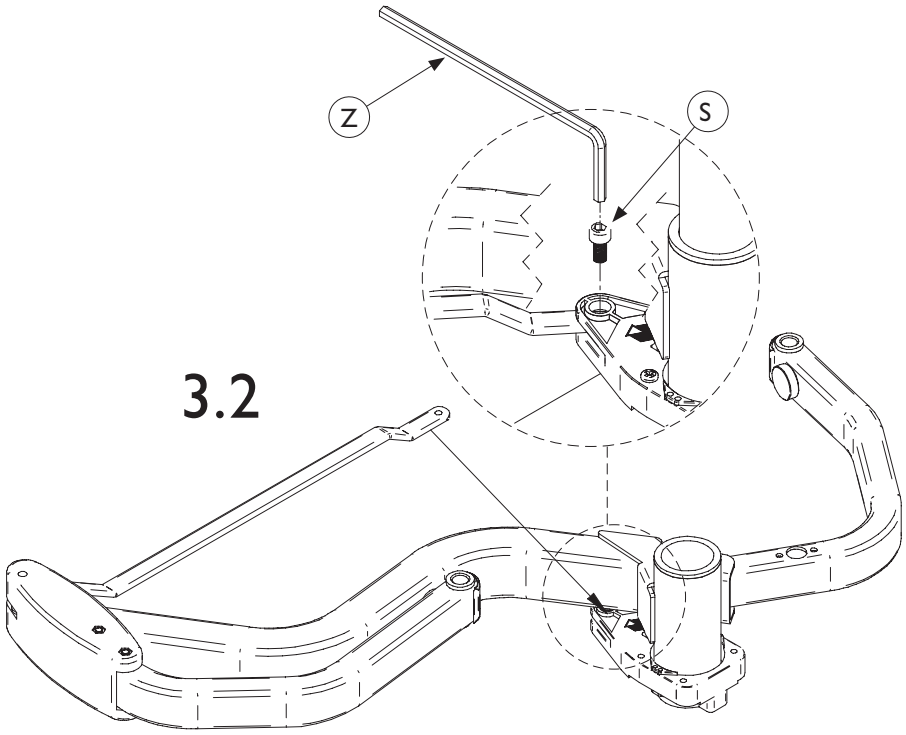

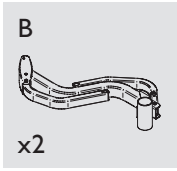

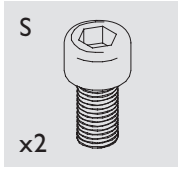

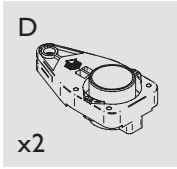

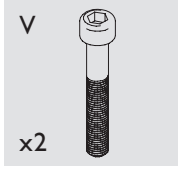

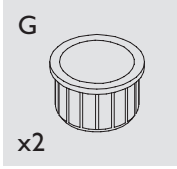

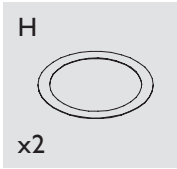

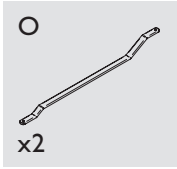

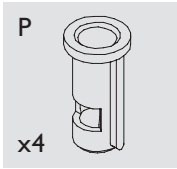

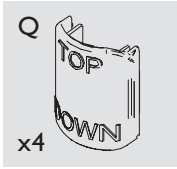

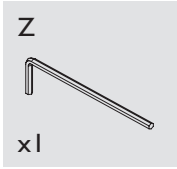

Left hand version

4

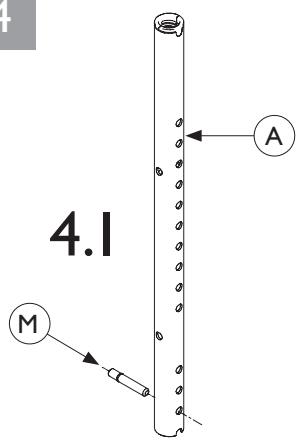

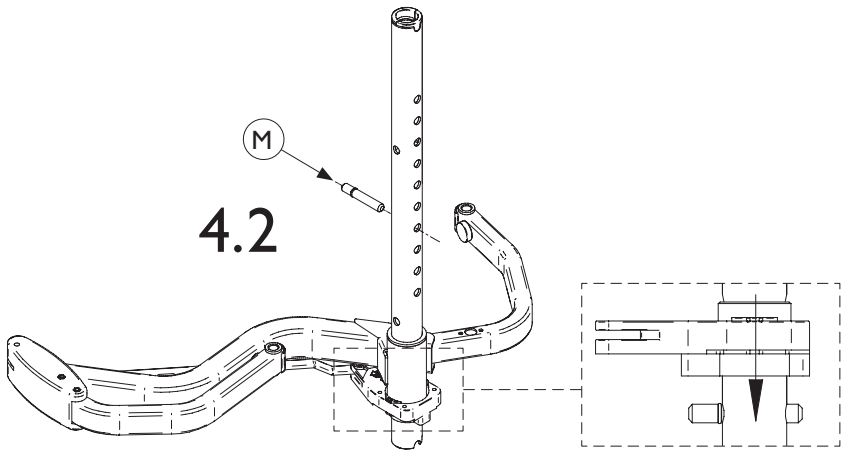

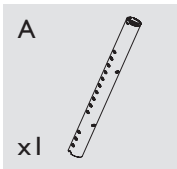

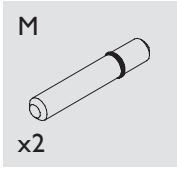

Left hand version

5

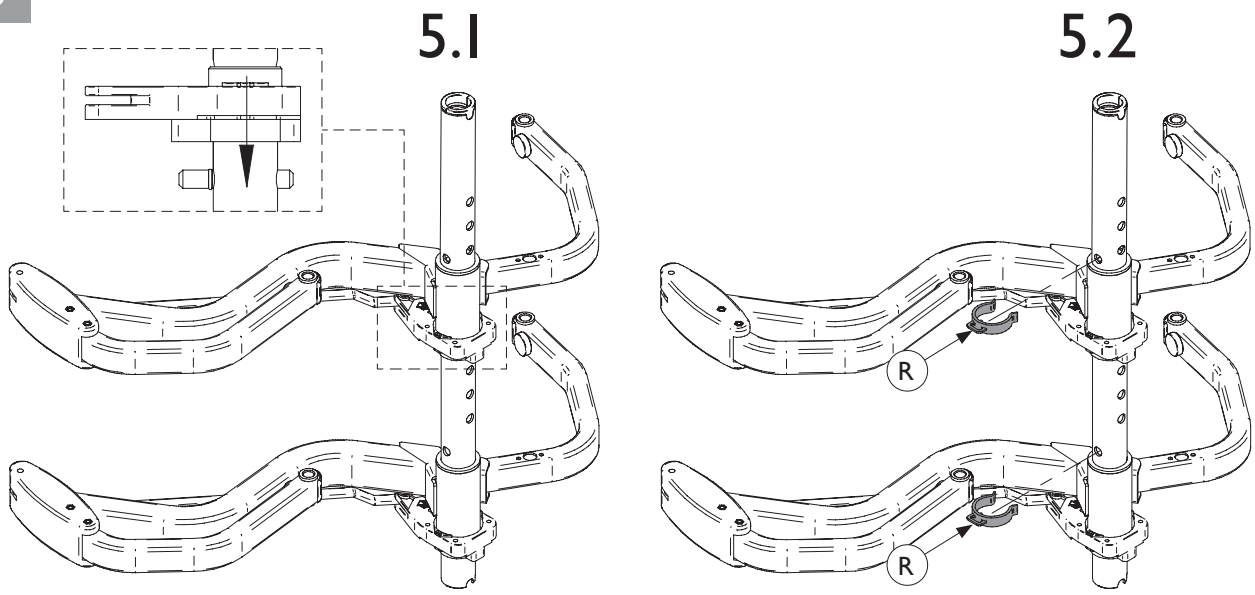

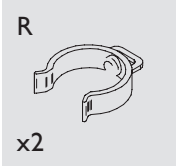

Left hand version

6

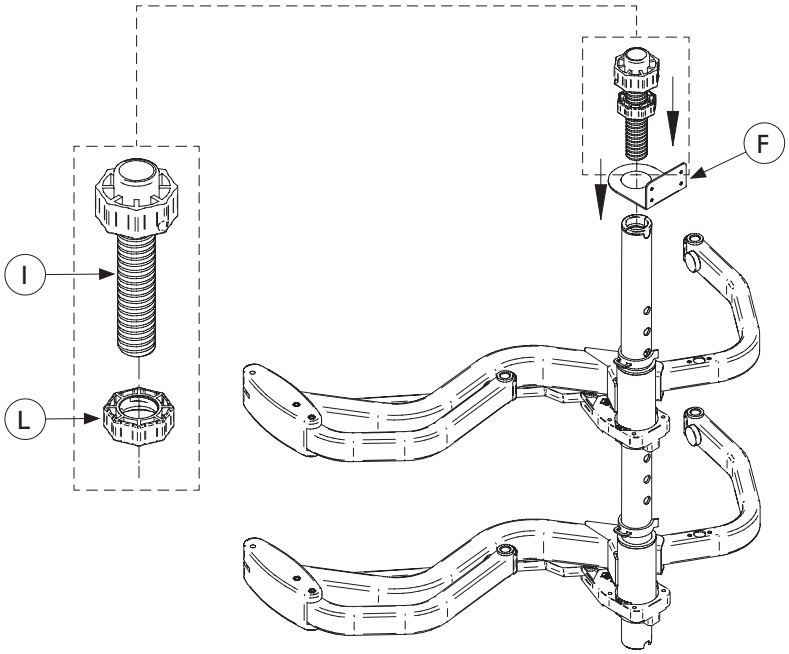

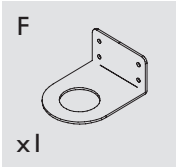

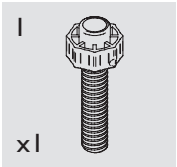

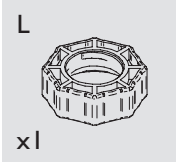

Left hand version

7

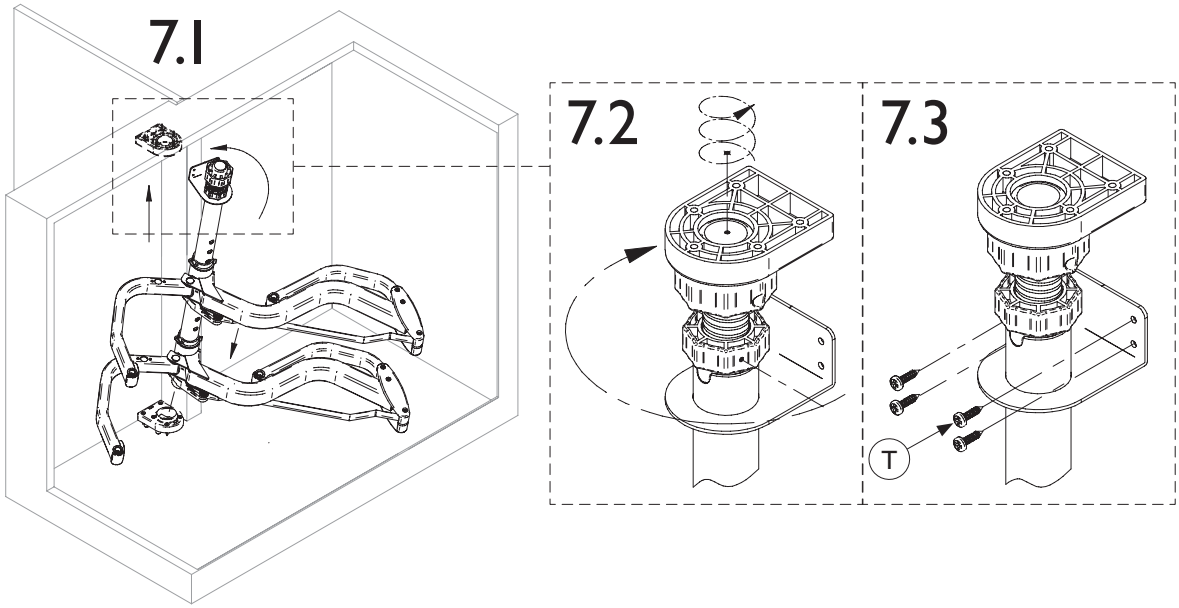

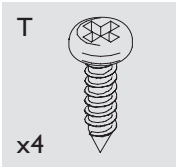

Left hand version

1 Right hand version

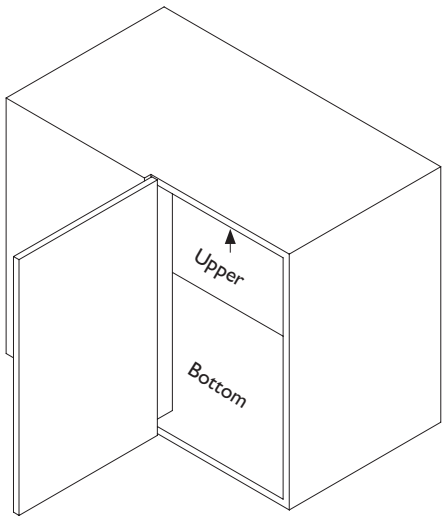

DOOR	A	B
40	436	427,5
45	486	477,5
60	636	627,5

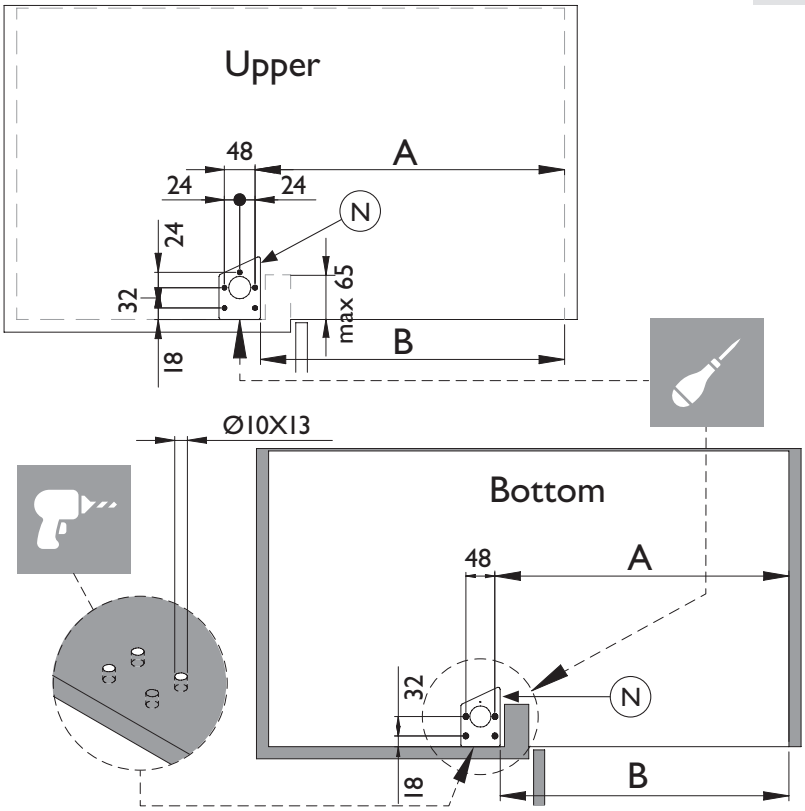

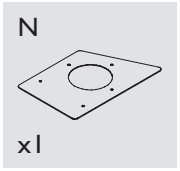

2

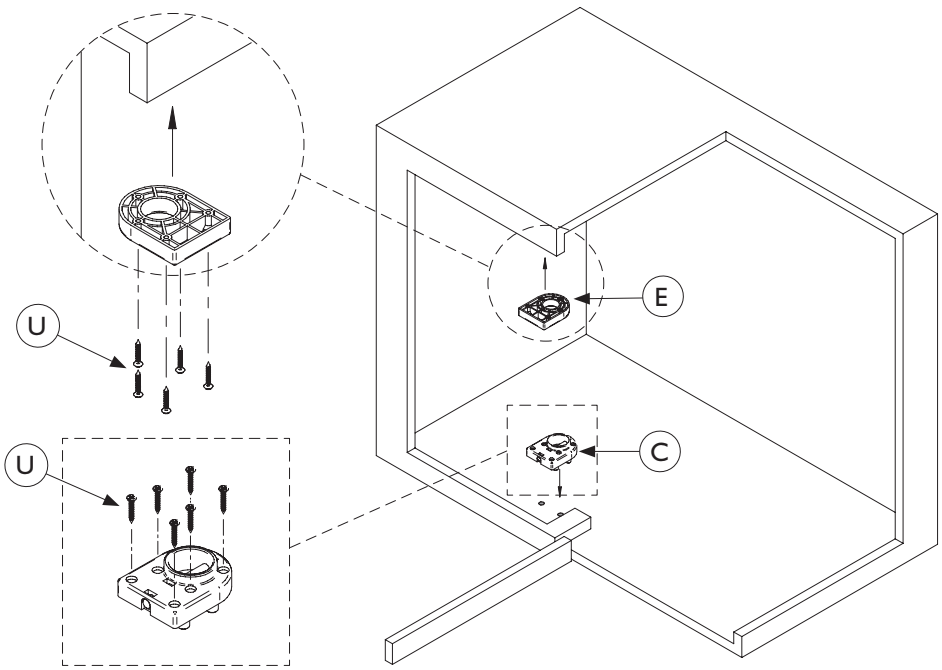

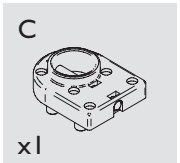

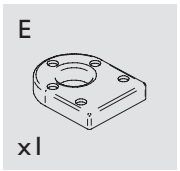

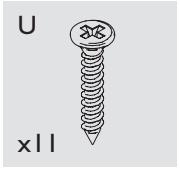

Right hand version

3 x2

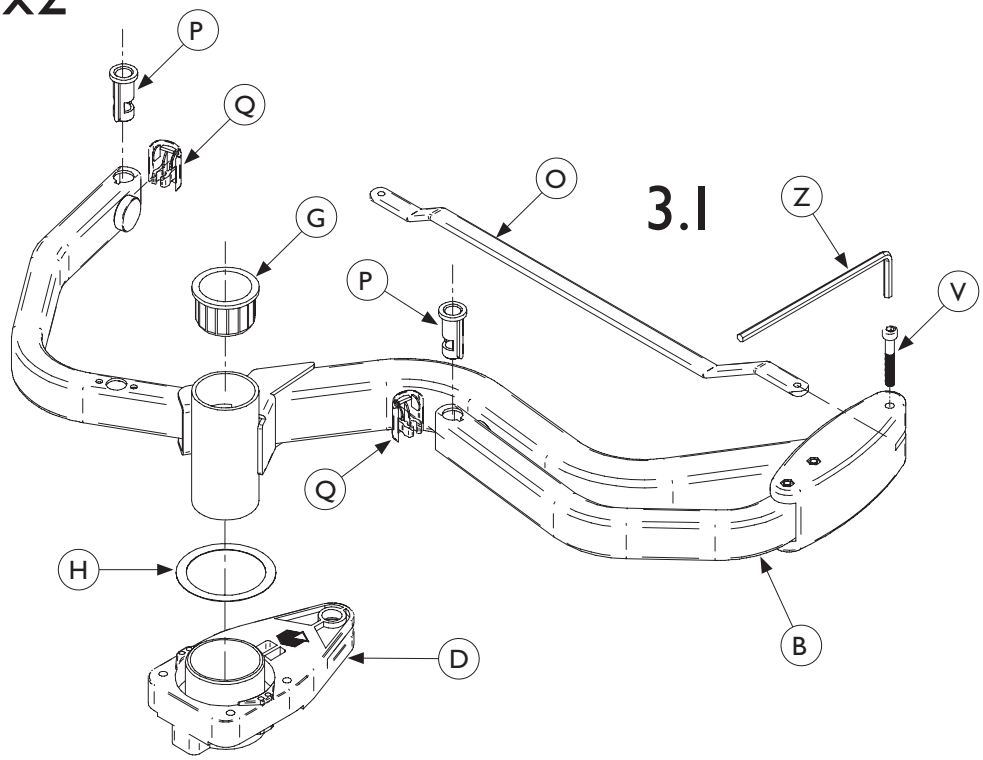

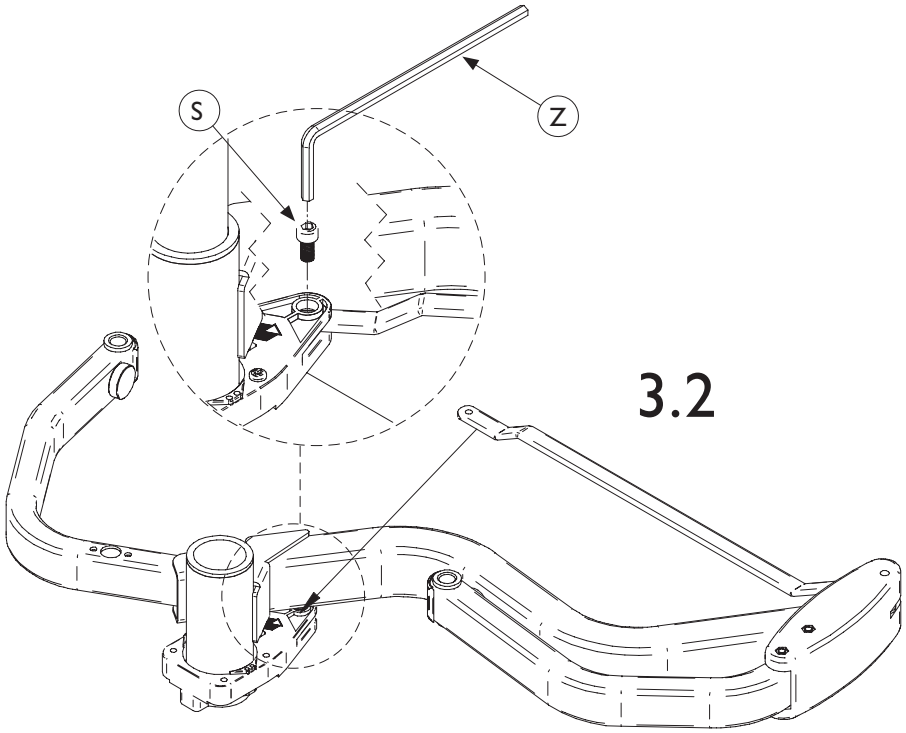

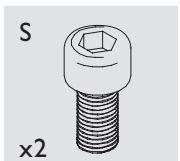

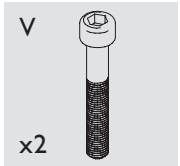

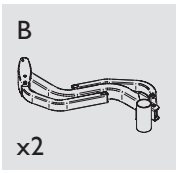

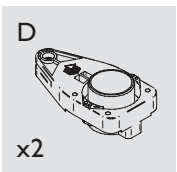

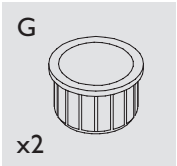

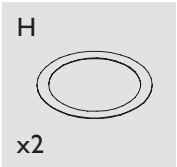

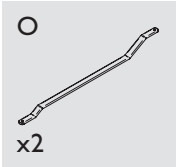

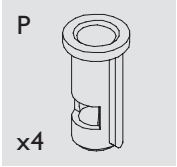

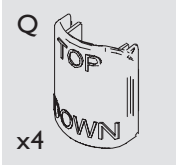

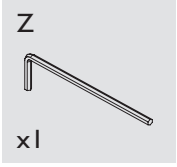

Right hand version

4

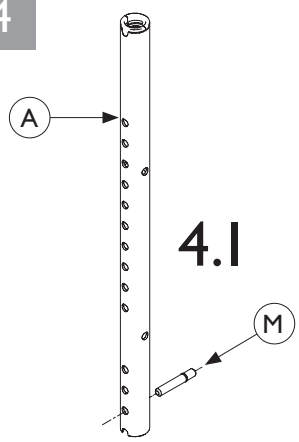

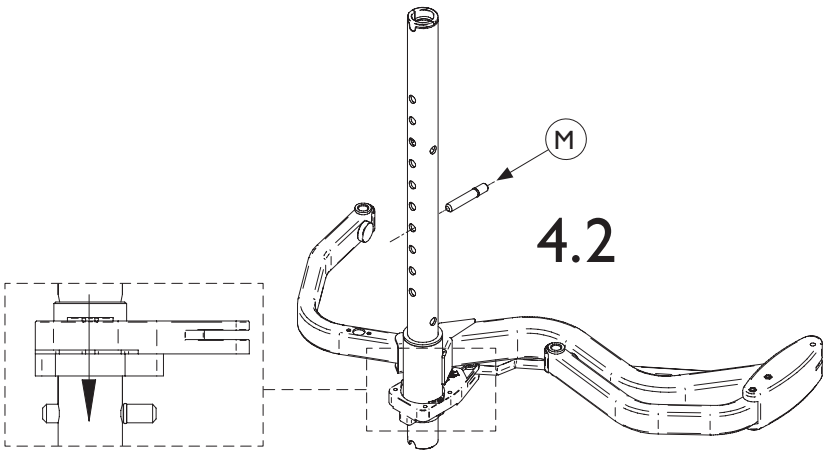

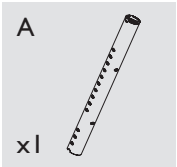

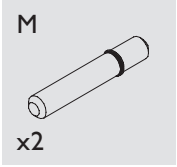

Right hand version

5

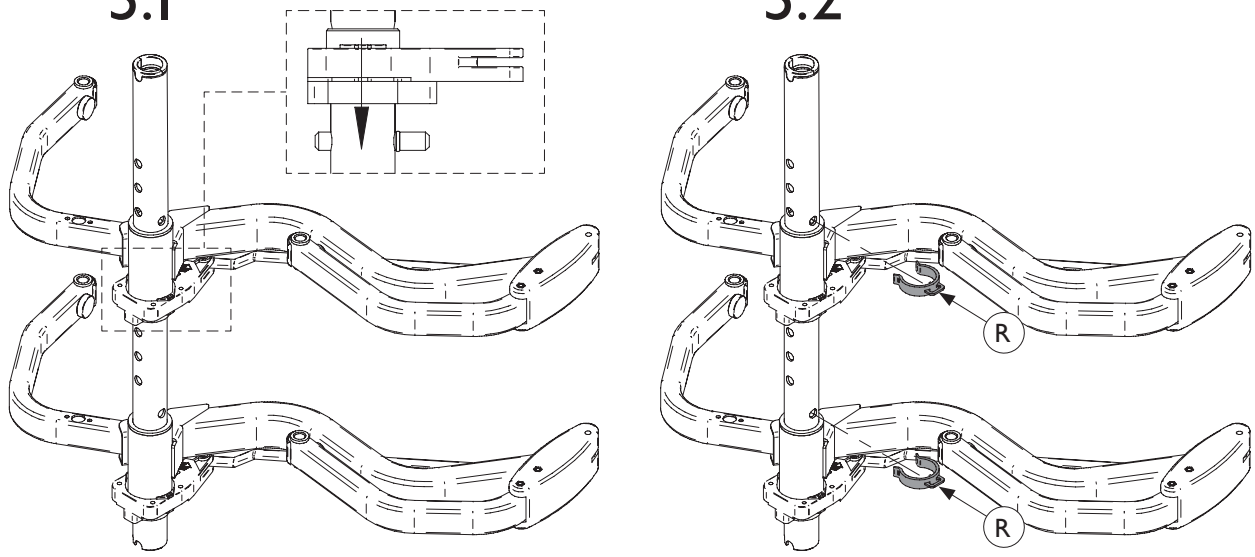

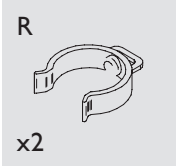

Right hand version

6

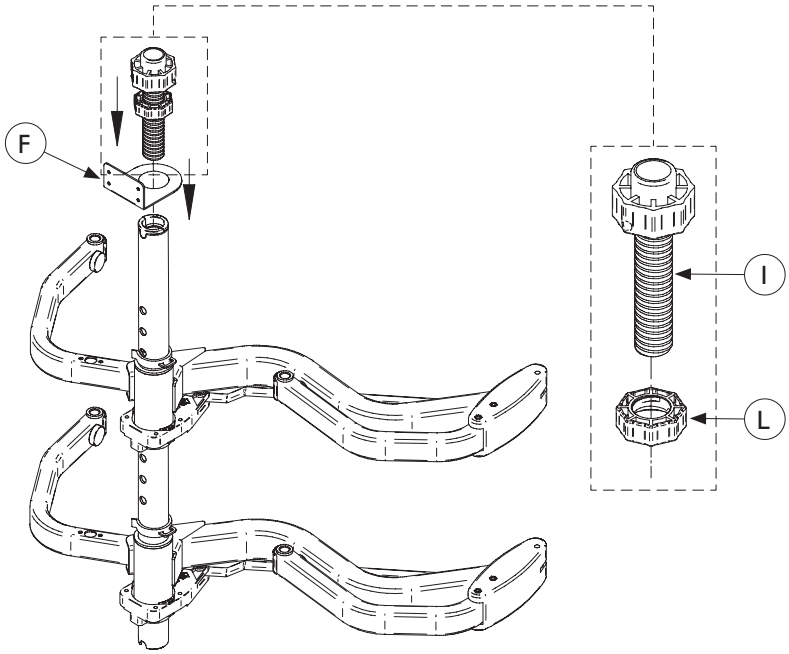

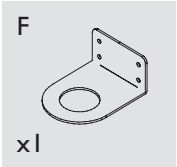

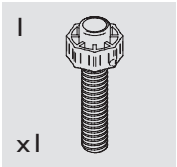

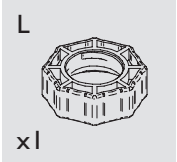

Right hand version

7

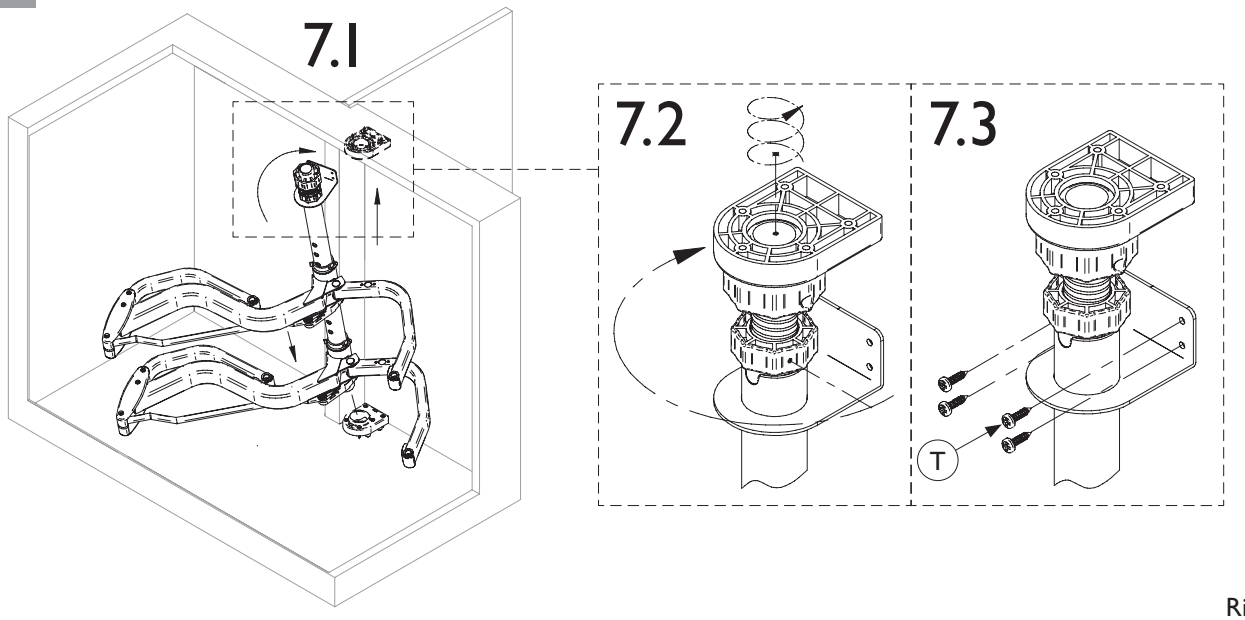

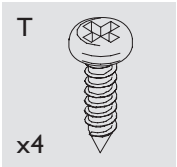

Right hand version

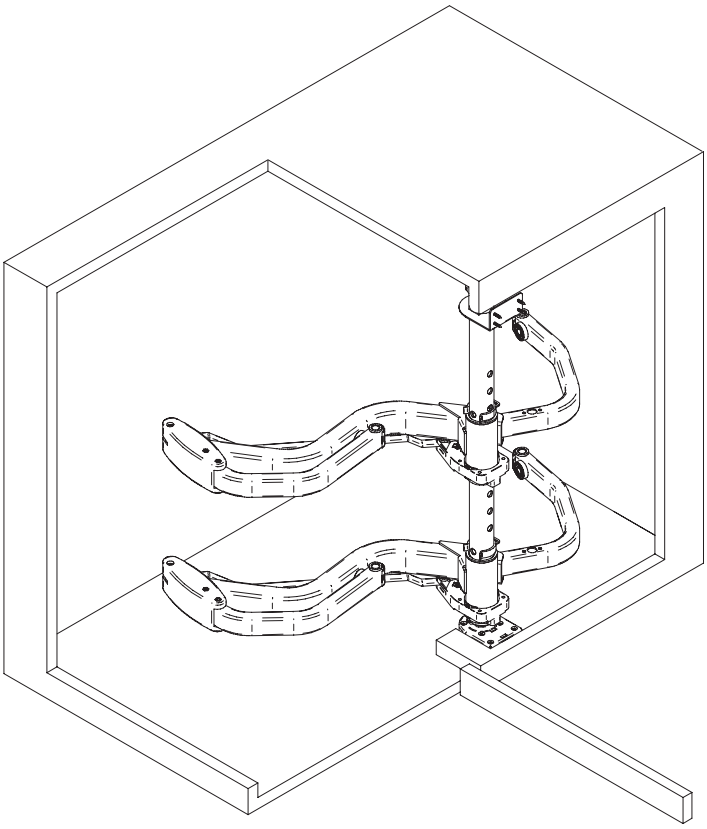

Left hand version

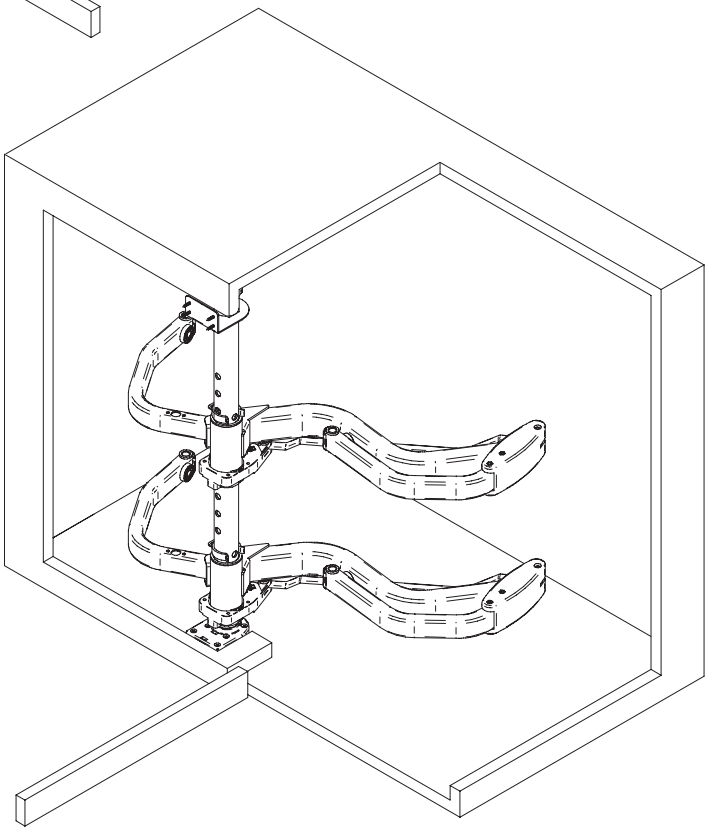

Right hand version

Soft-close kit

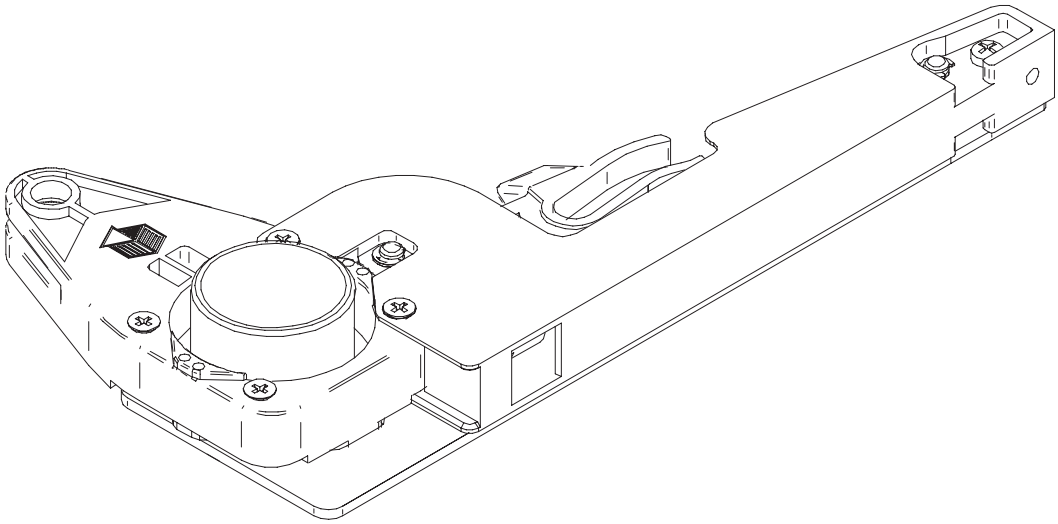

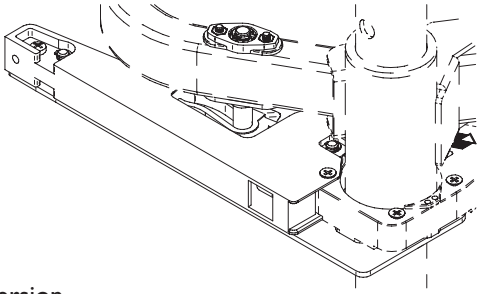

Right hand version

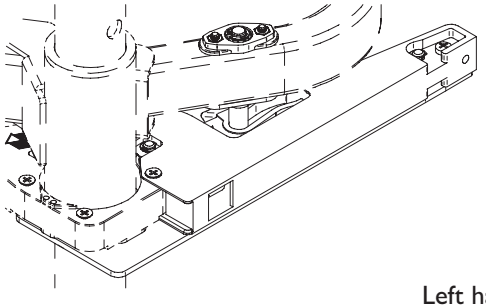

Left hand version

10 min

x 1

+

A

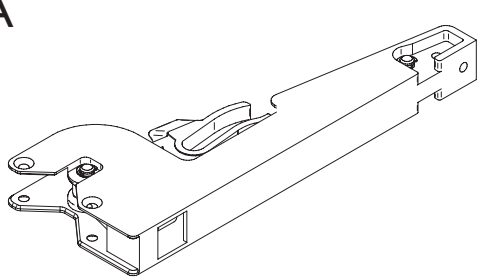

x 2

D

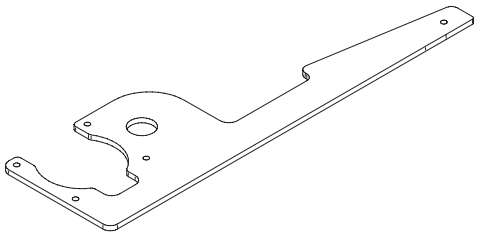

x 2

B

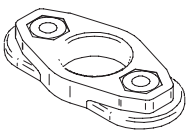

x 2

C

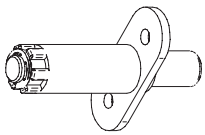

x 2

E

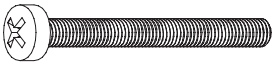

x 4

F

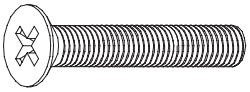

x 8

G

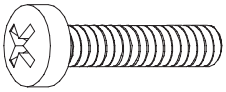

x 2

Right hand version

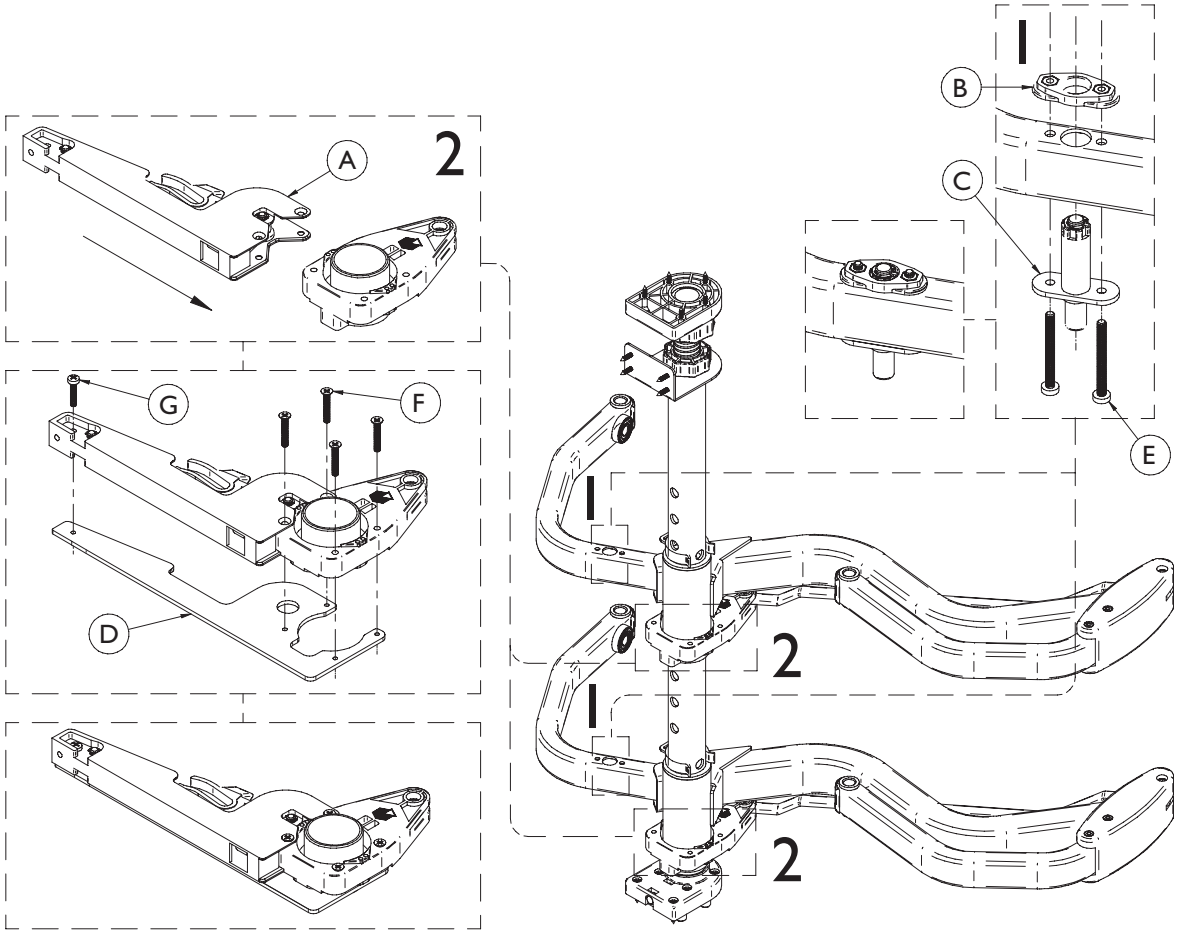

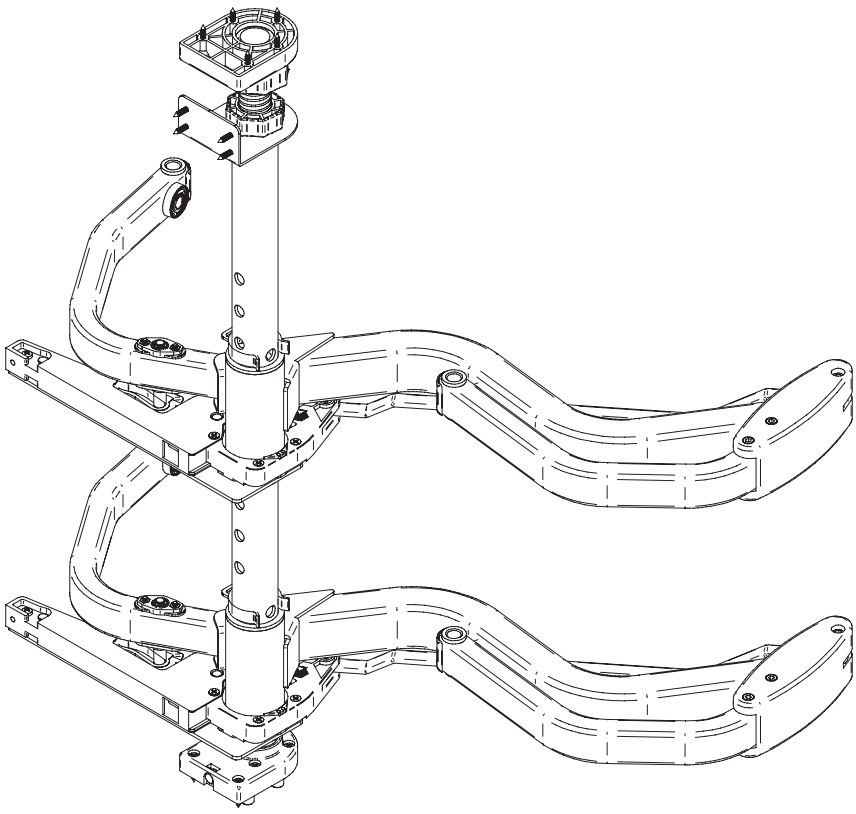

A
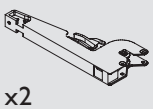
x2

B
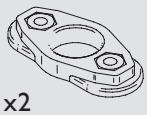
x2

C
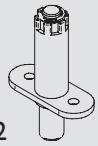
x2

D
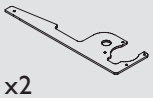
x2

E

x4

F

x8

G

x2

Left hand version

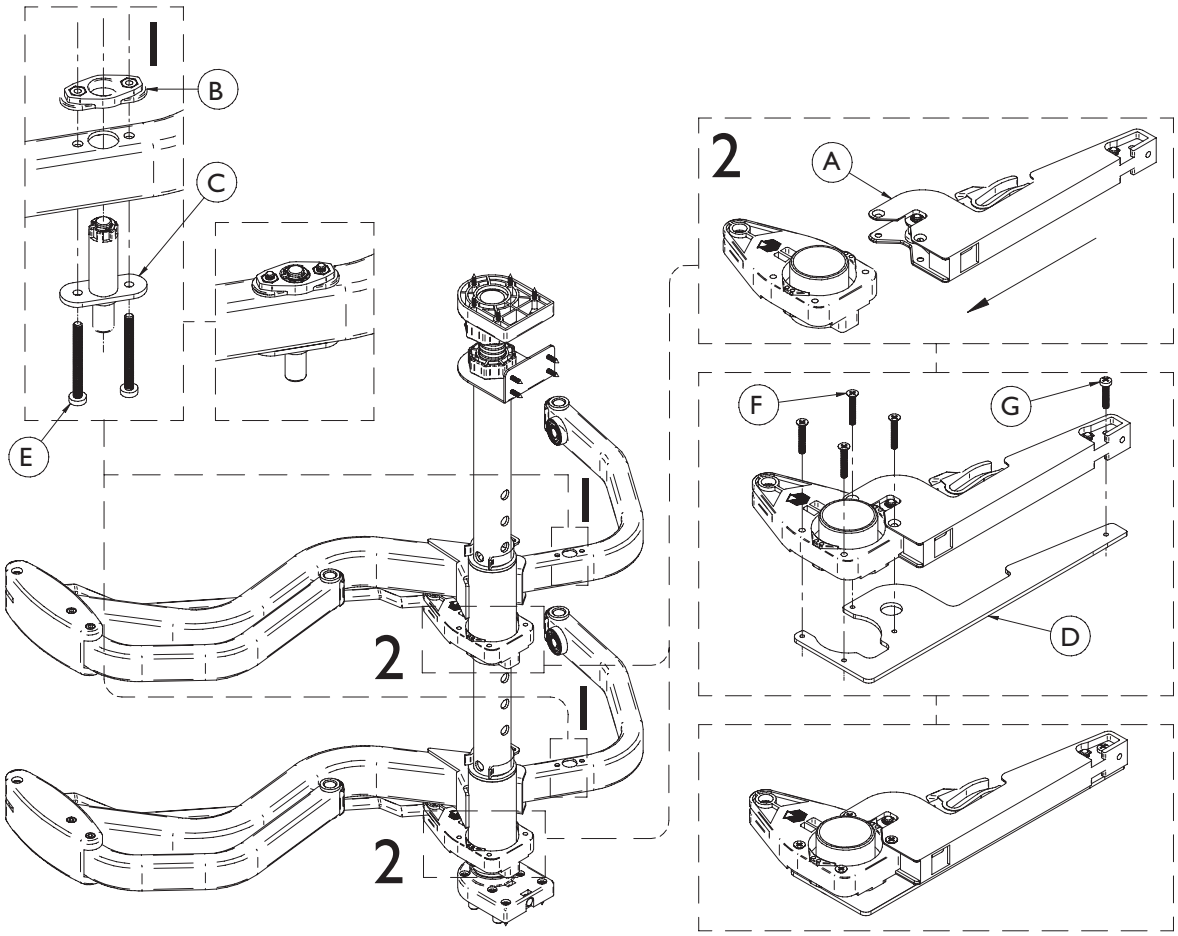

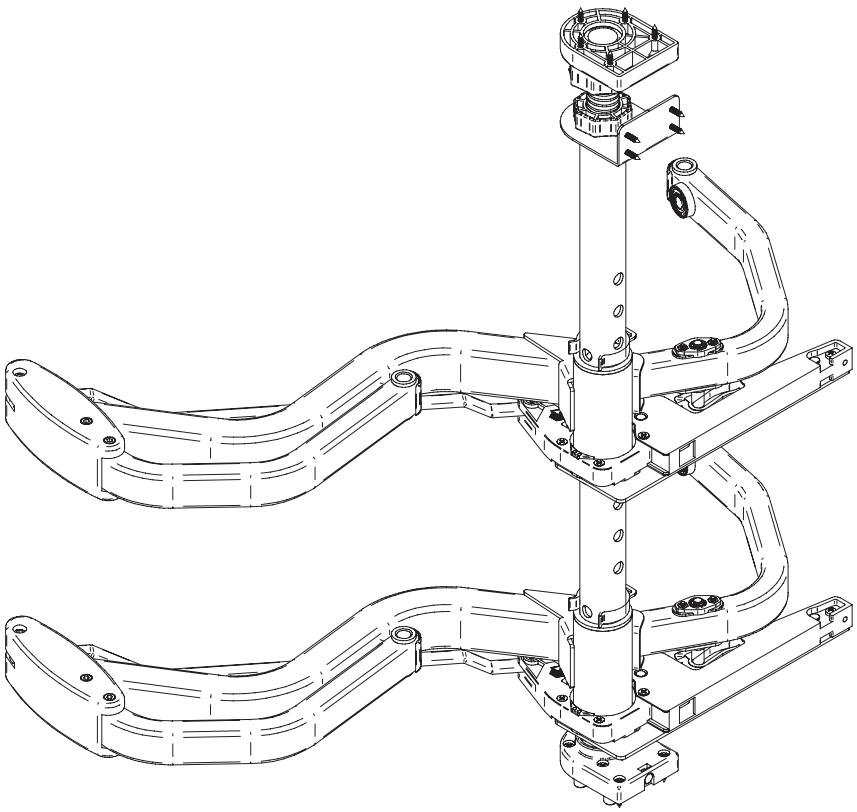

A
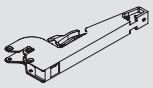
x2

B
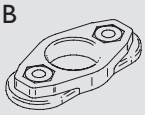
x2

C
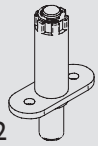
x2

D

x2

E

x4

F

x8

G

x2

Right hand version

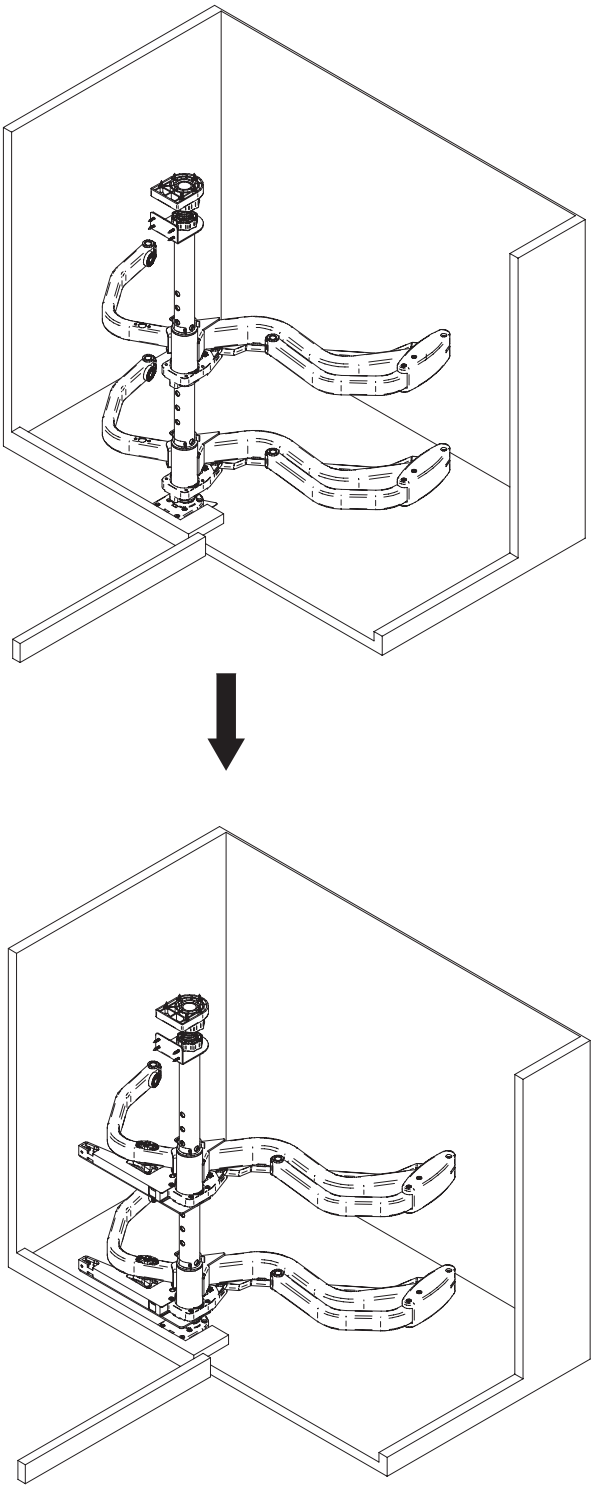
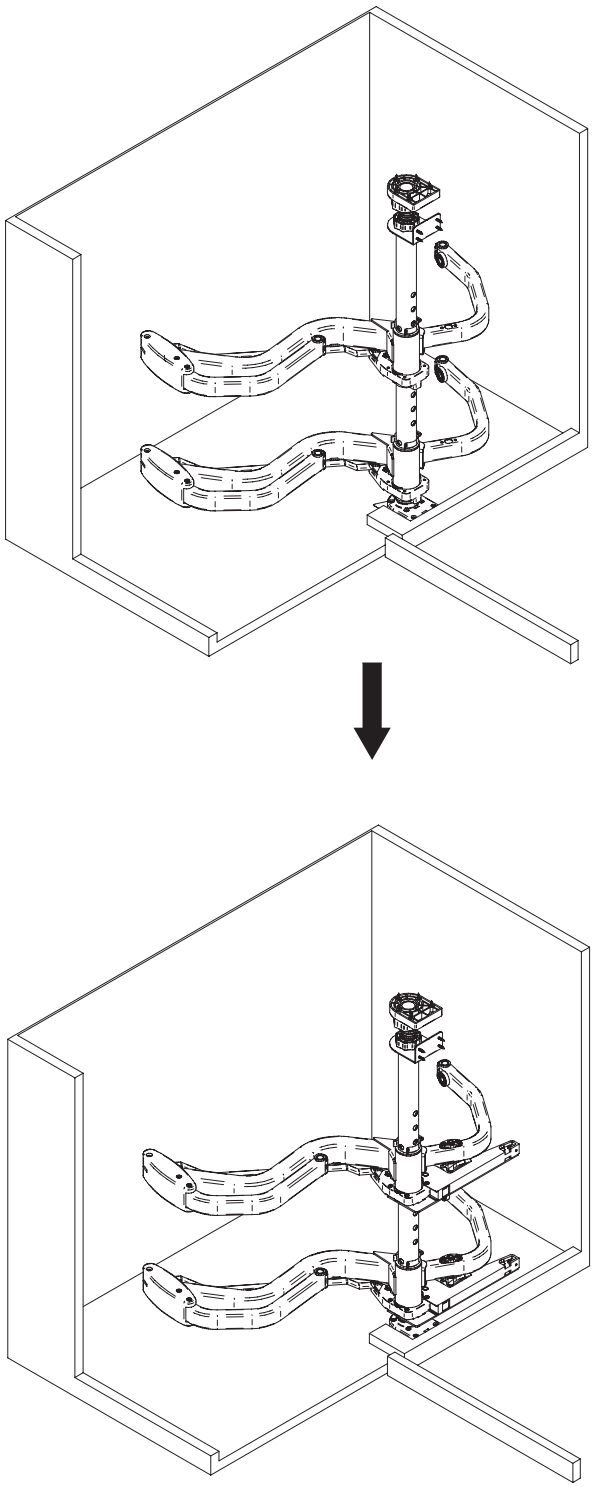
Left hand version